Procedure for VS6-VS7 Suction Can calculation

COPY COMPLIANT to the original document resident on the computer system at the time of printing

Index

1. Scope and field of application 3

2. Acronyms 3

3. General design, verification procedure and acceptability criteria 3

4. "Design xTools" in-house software 5

4.1. "Suction Tank Design" overview 5

4.2. Input instructions: "Geometry input data" page 7

4.2.1. Design conditions and material data 10

4.2.2. Joint efficiency 11

4.2.3. PED data 11

4.3. Results of the calculation 12

4.3.1. "Verification according to HI" results 12

4.3.2. "Thickness of shell and bottom plate" results 13

4.3.3. "Flange Design" results 16

4.3.4. "Mass calculation" results 19

4.3.5. "PED verification (WIP)" results 19

5. References 20

ANNEX A: TMP design internal rules for *suction can* design 21

COPY COMPLIANT to the original document resident on the computer system at the time of printing

1. Scope and field of application

This procedure is a comprehensive guide for the preliminary design of VS6 / VS7 *suction cans* (also referred to as *tanks or barrels*), mainly adhering to the ASME Boiler and Pressure Vessel Code, Section VIII and API 610 standards. It provides detailed instructions on utilizing a set of in-house developed tools to perform initial calculations concerning the mechanical strength and stability of these components. These preliminary results are intended to facilitate validation through Finite Element Method (**FEM**) analysis. It is important to note that **FEM** validation is mandatory before the component can be approved for construction.

This procedure is applicable to Nova Milanese and La Spezia plants.

2. Acronyms

ASME: American Society of Mechanical Engineers

BPVC: Boiler and Pressure Vessel Code

FEM: Finite Element Method

HI: Hydraulic Institute

HT: Hydrotest

MAWP: Maximum Allowable Working Pressure

MAWT: Maximum Allowable Working Temperature

NDT: Non-Destructive Test

PED: Pressure Equipment Directive

PED: Pressure Equipment Directive (European Directive)

R&D: Research & Development

TMP: Termomeccanica Pompe

UG: Unfired General (requirement from ASME BPVC)

VS: Vertically Suspended (API 610 vertical pumps)

3. General design, verification procedure and acceptability criteria

Typical suction cans are composed of a central cylinder, a top custom flange and a bottom head. The pump is installed inside the suction can. Cans must be designed to minimize pressure losses, vortexes and swirls formations on the fluid approaching the pump, and to withstand both **HT** and the

COPY COMPLIANT to the original document resident on the computer system at the time of printing

worst operating conditions (at **MAWP** and **MAWT**), without any leakage and/or stress outside the allowable level.

For the reasons above, first, the suction tank diameter and length must be selected according to the **HI** 9.8 standard. Then, the component thicknesses must be determined to withstand internal and external pressures based on the following criteria:

- The flange is generally sealed with a self-energizing gasket, such as an O-ring, and has metal-to-metal contact outside the bolt circle. Therefore, verification under the criteria of acceptability of ASME BPVC sec. VIII, Div.1, Appendix Y shall be done.
- In addition to the above, a further verification of the flange opening with internal pressure shall be done according to the formula of the example in "ANNEX A: TMP design internal rules for *suction can* design". Once the flange opening at the gasket radius has been evaluated, it is necessary to compare it with the maximum allowable opening of the gasket without risk of leakage. For this purpose and when an O-ring type gasket is used (that is the most frequent application), **SOP-506** and **Mod.482** must be used.
- For other types of flanges without metal-to-metal contact outside the bolt circle, the verification guidelines of the above-mentioned Appendix Y cannot be applied, while those in ASME BPVC sec. VIII, Div.1, Appendix 2 shall be used.
- The cylinder verification with applied internal pressure shall be carried out using the criteria of acceptability of ASME BPVC sec. VIII, Div.1, UG-16 and UG-27. In case of applied external pressure (for example in case of negative pressure inside the can), the verification under the criteria of acceptability of UG-28 shall be used.
- Bottom head shape is mainly hemispherical, ellipsoidal or torispherical and its verification shall be carried out using the criteria of acceptability ASME BPVC sec. VIII, Div.1, UG-32 and Appendix 1-4.

All the verifications above, can be done using the in-house software **"Design xTools"**, section **"Suction Tank Design"**. The description and the instruction for using the software are described in Chapter 4 of this document.

Important note: In the connection between Flange - Cylinder and Cylinder - Head, bending moments and stresses are generated by different stiffness and deformations of the 3 components. For that reason, it can be necessary to insert some reinforcements or stiffening components like ribs or cylinders shells. The local verification of these components must be done using FEM analysis and therefore it is not the purpose of this document.

COPY COMPLIANT to the original document resident on the computer system at the time of printing

4. "Design xTools" in-house software

Design xTools is an in-house software programmed in C# (C sharp), featuring various calculation tools. The specific tool for designing Suction Cans is called ***'Suction Tank Design'***. To access the list of calculation tools, open and install the **Design xTools** application from the following folder:

T:\IT006\Rete\Design Standards\03.Calculation Tools\10000 Design xTools

4.1. "Suction Tank Design" overview

Once ***Design xTools*** is installed, open it and click on "Design Mode" push button (*Figure 1*).

Figure 1: Design xTool interface.

Then click on SUCTION TANK DESIGN "OPEN" push button (*Figure 2*).

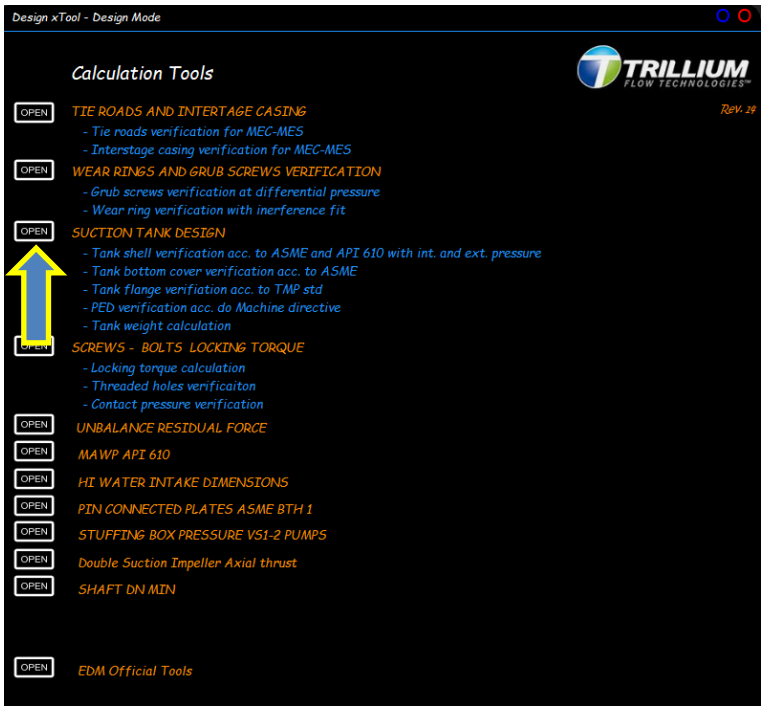

Figure 2: Calculation Tools in "Design Mode" – Open Suction Tank Design.

COPY COMPLIANT to the original document resident on the computer system at the time of printing

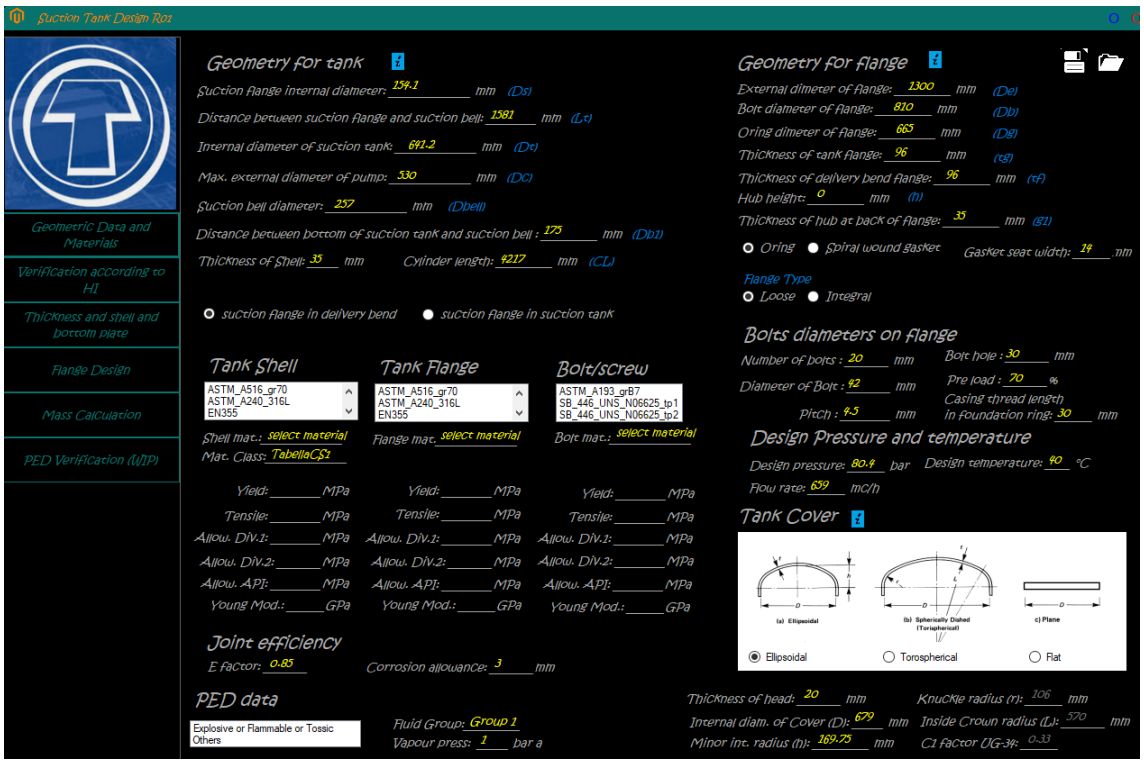

Figure 3: "Suction Tank Design" input page.

The window in *Figure 3* appears; in the left bar of the window there's a list of buttons, the following input/outputs pages can be visualized by clicking on them:

- *"Geometric Data and Materials"* is the default initial page with inputs for the calculations. See Chapter 4.2.
- "*Verifications according to HI"* is the page with verification outputs according to **HI***:* see Chapter 4.3.1.
- *"Thickness and shell and bottom plate"* is the output page with verification of the minimum required thickness for the shell and the bottom plate/tank cover (vessel head) according to ASME and API. See Chapter 4.3.2.
- *"Flange Design"* is the output page with the flange verification according to ASME and "**TMP** design standard". See Chapter 4.3.3.
- *"Mass calculation"* is the output page with the calculated weight of the *suction can*, including the shell, bottom plate/tank cover and flange. See Chapter 4.3.4.
- **"PED** verification" is the output page with **PED** Category calculation (for information only). See Chapter 4.3.5.

COPY COMPLIANT to the original document resident on the computer system at the time of printing

4.2. Input instructions: "Geometry input data" page

All the inputs for the calculations shall be filled in all the fields on the first page ("Geometry input data", reference *Figure 3*).

To get correct results all the sections of the input page must be filled.

Important: each time an input value is changed, all the results are automatically updated.

The top-left section of the input page is labelled *'Geometry for tank'* and contains the input data concerning the cylindrical shell (see *Figure 4*).

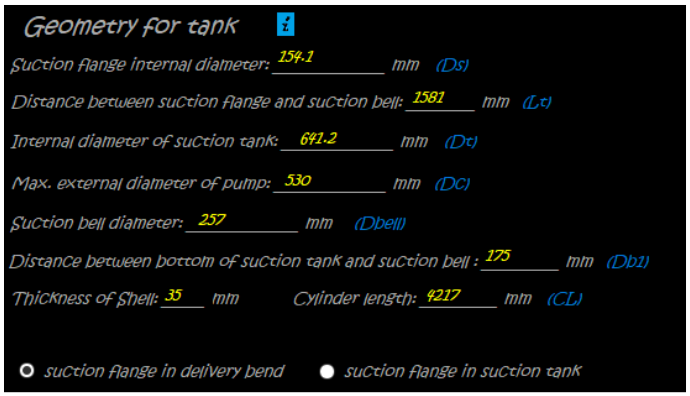

Figure 4 Input geometry data for tank.

By clicking the "*i*" button, the guiding picture in *Figure 5* appears, clarifying the meaning of all the dimensions related to the geometry.

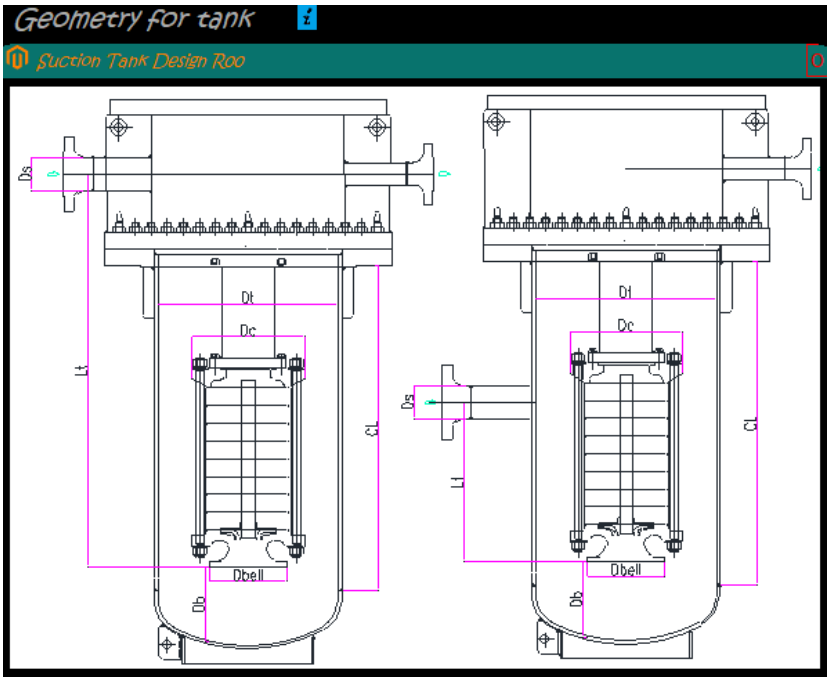

Figure 5: Tank geometry dimensions.

COPY COMPLIANT to the original document resident on the computer system at the time of printing

For the verification of the minimum thickness of the shell, the internal diameter of the suction can is assumed to be equal to the internal diameter of the flange. All other parameters like *Ds, Lt, Dbell*, etc., are used only for the verification of the correct inlet flow to suction bell (according to **HI** 9.8 recommendations for VS6 pumps) and are not used for mechanical strength verification.

With reference to *Figure 3*, the top-right section of the input page is titled *'Geometry for flange'*. This section contains all the necessary inputs for flange calculations, in accordance with ASME BPVC, Section VIII, Div. 1, Appendix Y (refer to para. 4.3.3.1) or Appendix 2 (refer to para. 4.3.3.2), as well as internal rules for flange opening and bolt stress calculations (refer to para. 4.3.3.3). For a detailed view of this section, refer to *Figure 6*.

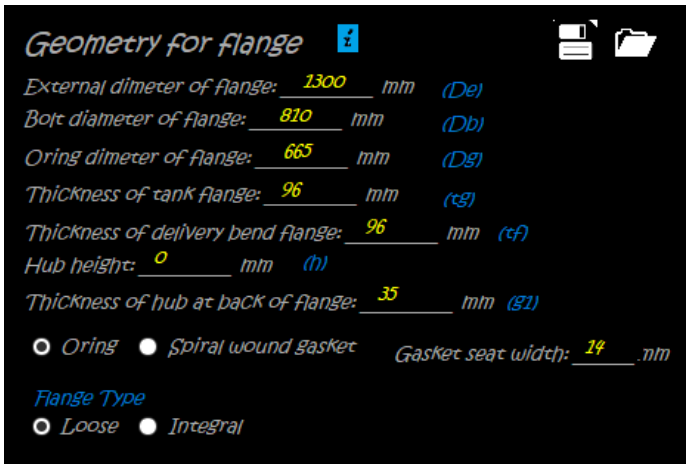

Figure 6: Geometry for flange section.

By clicking the "*i*" button, a guiding picture appears to clarify and describe the input dimensions. Refer to *Figure 7* for more details.

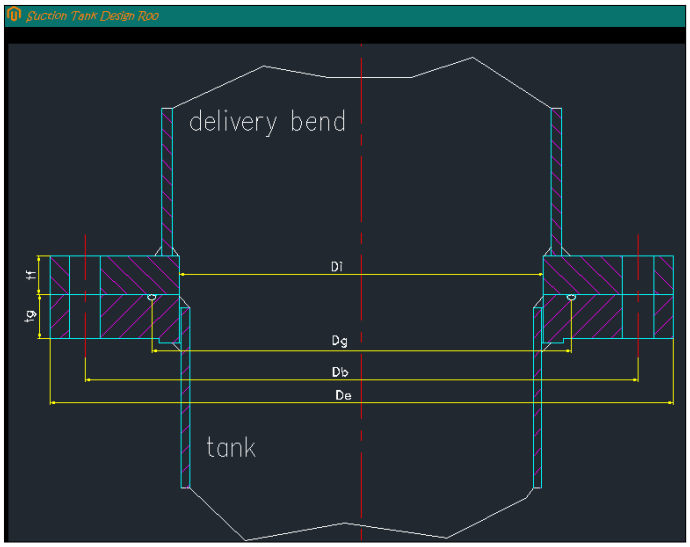

Figure 7: Flange geometry specific dimensions.

COPY COMPLIANT to the original document resident on the computer system at the time of printing

The "*Thickness of the hub at the back of the flange*" (see *Figure 6*) parameter should match the specified "*Thickness of Shell*" parameter (see *Figure 4*) when a *loose* flange type is used. For a typical *loose* flange refer to the design example in *Figure 8*.

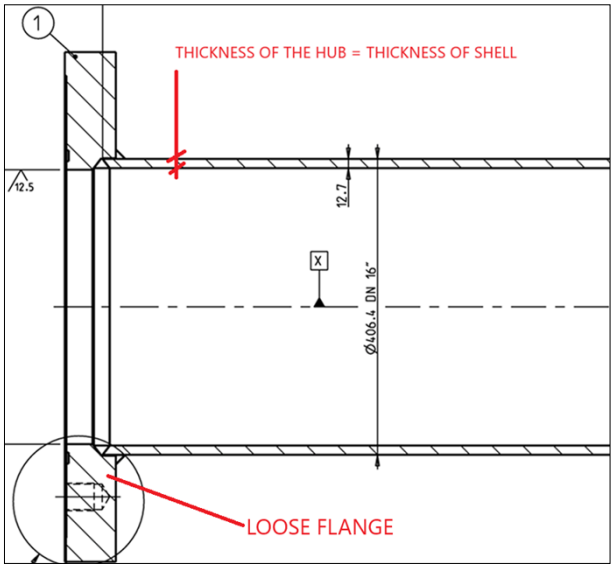

Figure 8: Example of "loose" flange on suction can.

With reference to *Figure 3*, the right-centre and right-bottom sections of the input page are labelled *'Bolts Diameters on flange*' and *'Tank Cover'* respectively (see *Figure 9*). These sections are used to complete the geometric input parameters, including fastener data and tank cover geometry.

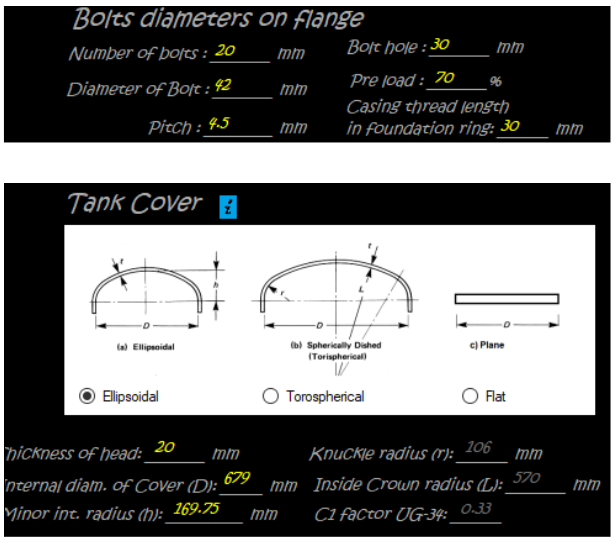

Figure 9: "Bolt diameters on flange" and "Tank Cover" sections.

For the tank cover, the intended geometry type must be selected before entering values into the input parameters.

COPY COMPLIANT to the original document resident on the computer system at the time of printing

4.2.1. Design conditions and material data

Below the *'Geometry for tank'* section, there is an area dedicated to materials' data and design conditions called *'Design pressure and temperature'* (see *Figure 10*). This section's inputs are:

- The flow rate (needed for HI 9.8 verifications).
- The design pressure.
- The temperature (needed for mechanical verification).

The abovementioned inputs should be entered first.

Select the appropriate materials from the *'Tank Shell'*, *'Tank Flange'*, and *'Bolt/screw'* sections. Based on the entered design temperature, the main material properties are interpolated using ASME BPVC Section II material data. The *'Mat. Class'* output parameter, derived from ASME BPVC Section II, specifies which table of the standard to refer to for pressure verification of the selected material.

A list of materials is already included among the inputs. If the material of construction is not present, it can be manually defined.

Important: at least two conditions must be checked and verified:

- **MAWP**: this is the design condition for pump operation. The design pressure shall match the actual **MAWP**, and the design temperature must correspond to the actual **MAWT**.
- **HT**: this is the Hydro Test condition. The design pressure shall match the actual **HT** pressure, and the design temperature shall be set to 40°C.

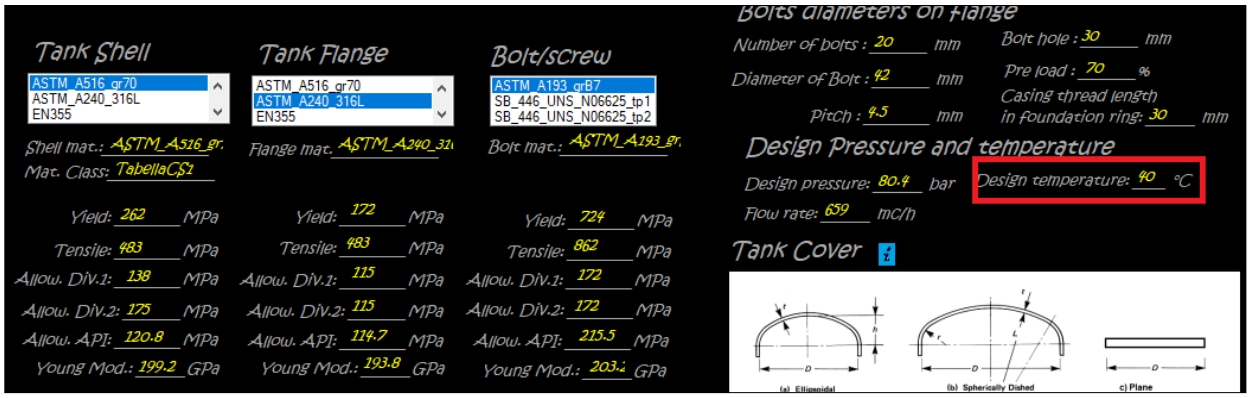

Figure 10: Material data and design conditions.

COPY COMPLIANT to the original document resident on the computer system at the time of printing

4.2.2. Joint efficiency

Below the materials' data section, there is a section labelled "*Joint efficiency*" (see *Figure 11*).

Figure 11: "Joint efficiency" section.

Joint efficiency ('*E factor'* in ASME BPVC Section VIII, Division 1) is a measure of the strength of a welded joint compared to the strength of the base material. It accounts for potential defects in the weld, such as porosity or inclusions, which can weaken the joint. The efficiency is expressed as a ratio, with a value of 1.00 (100%) indicating that the joint is as strong as the base material. Lower values indicate reduced strength.

There are standard values for joint efficiency in pressure vessels, which depend on the type of welded joint and the extent of performed **NDT**. Here are some typical values based on ASME BPVC Section VIII, Division 1, UW-12:

- 1.0 (100%): full radiography.
- 0.85 (85%): spot radiography.
- 0.7 (70%): no radiography.

As per table UW-12, the above values are valid only for *"butt joints as attained by double-welding or by other means that will obtain same quality of deposited weld metal on the inside and outside weld surfaces to agree with requirements of UW-35. Welds using metal backing strips that remain in place are excluded".* This is the common type of welding that is applicable for suction cans. If other type of joints must be used, the applicable table is UW-12.

Regarding *'Corrosion allowance'* parameter (see *Figure 11*), the project's defined corrosion allowance for suction tank material should be considered. Unless otherwise specified, it should be at least 3 mm. For special corrosion-resistant alloys, a corrosion allowance of 0 mm can be considered, but it must be accepted by the customer before proceeding with calculations.

4.2.3. PED data

Below the "*Joint efficiency*" data section, there is a section named *'PED data'* (see *Figure 12*). This section should be completed only if PED verification is required. Select the type of fluid and enter the vapor pressure.

Please note that this tool is for informational purposes only and other verifications are beyond the scope of this standard operating procedure.

COPY COMPLIANT to the original document resident on the computer system at the time of printing

Figure 12: "PED data" section.

4.3. Results of the calculation

After compiling all the input data as outlined in Chapter 4.2 of this procedure, the results are automatically calculated. These results can be accessed by clicking on the various sections in the left menu, highlighted in *Figure 13*.

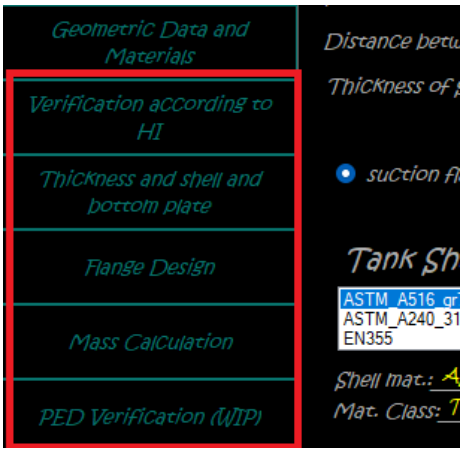

Figure 13: Results menu (highlighted).

The suitability of a component under the specified design conditions is confirmed with the notation "**VERIFIED**". If the component is deemed unsuitable, it is marked as "**NOT VERIFIED**".

4.3.1. "Verification according to HI" results

ANSI/HI 9.8-2018 standard provides guidelines for the design of pump intake structures to ensure an uniform and steady flow into pumps, minimizing issues like swirl and entrained air. In this page the tank geometry is validated through ANSI/HI 9.8-2018 standard prescriptions, including the requirements of guide vanes.

Important: this calculation has impact only on input geometry of the suction can and must be verified before going on with further mechanical structural calculations. If this verification is not necessary (i.e. the geometry is fixed by existing dimensions), this can be completely omitted without affecting the subsequent mechanical calculations.

In case the geometry of the can is limited by some dimension's restrictions (i.e. maximum diameter of the well) and not verified according to ANSI/HI 9.8-2018, then it's mandatory to check the behaviour of the fluid approaching the pump using CFD analysis.

COPY COMPLIANT to the original document resident on the computer system at the time of printing

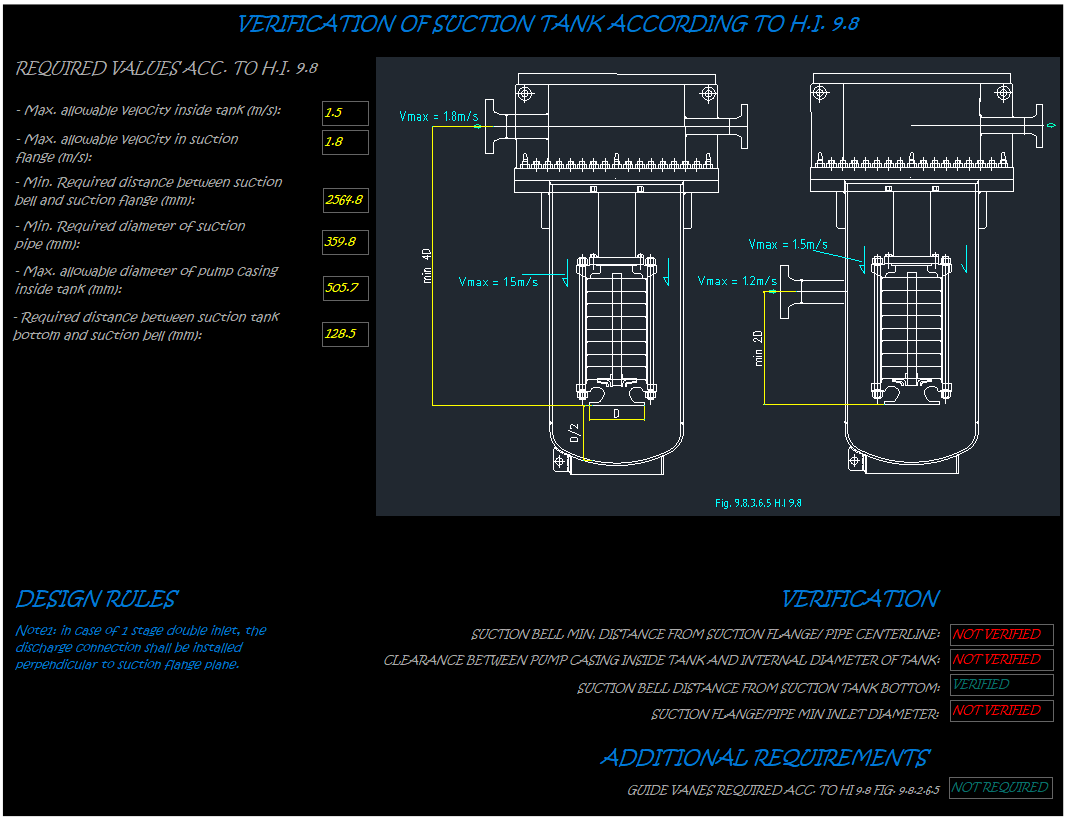

Figure 14: Verifications according to HI.

4.3.2. *"Thickness of shell and bottom plate" results*

In this part a verification is performed considering both ASME BPVC, Section VIII, Division 1 and API 610.

Important: API 610 imposes more stringent requirements on the allowable strength calculation for pressure casings than ASME BPVC for pressure vessels. These requirements must be considered only for pumps that are fully compliant with API 610.

With reference to *Figure 15*, there are three main sections divided by horizontal lines:

- "**SHELL THICKNESS VERIFICATION ACC. TO ASME VIII**": verification of the suction can shell under the action of the internal pressure (para. 4.3.2.1).
- "**HEAD THICKNESS VERIFICATION ACC. TO ASME VIII**": verification of the suction can head ('*Tank Cover*') under the action of the internal pressure (para. 4.3.2.2).
- "**SHELL VERIFICATION WITH EXTERNAL PRESSURE**": verification of the suction can shell under the action of external pressure, if applicable (para. 4.3.2.3).

COPY COMPLIANT to the original document resident on the computer system at the time of printing

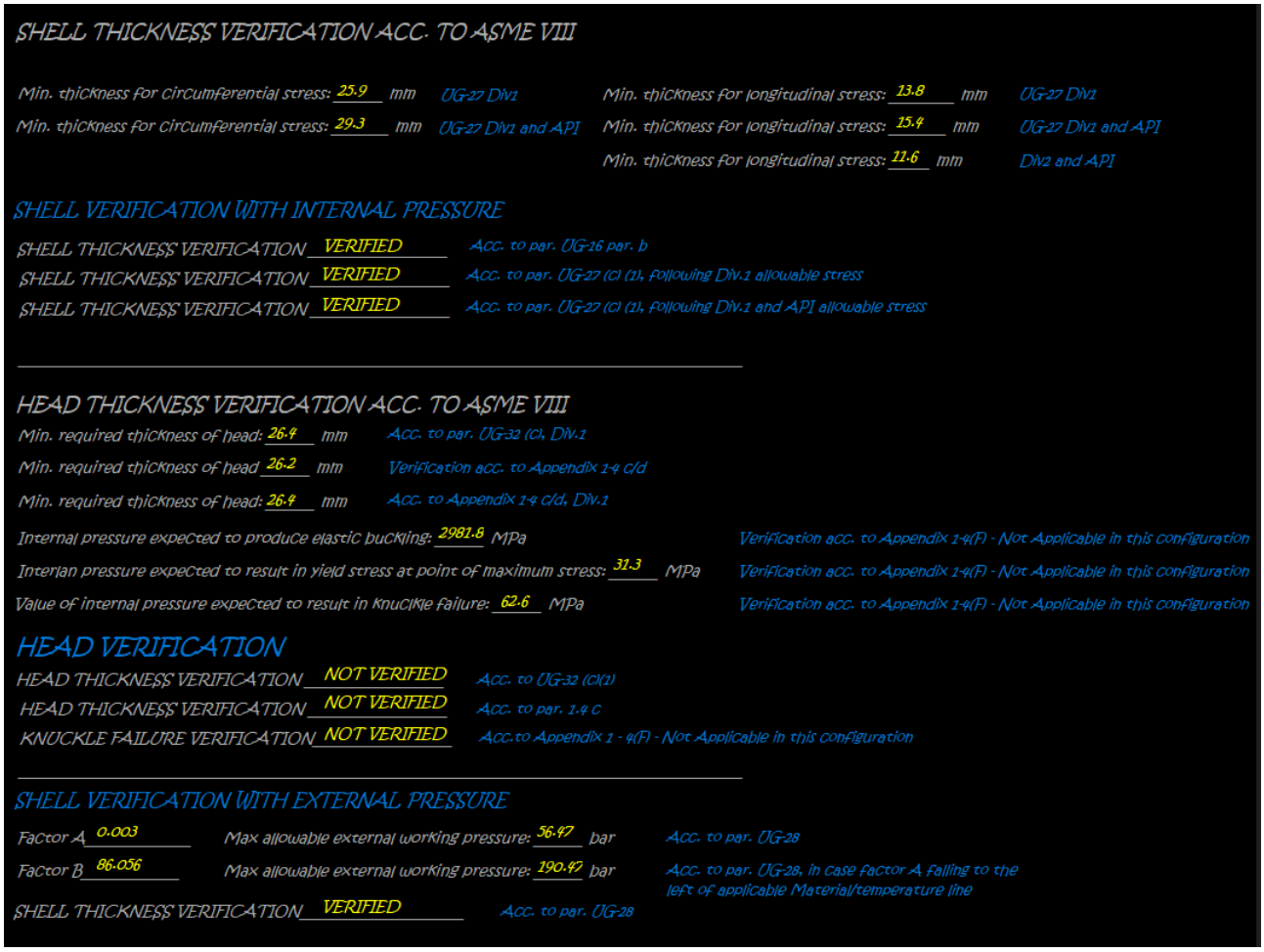

Figure 15: "Thickness and shell and bottom plate" results.

4.3.2.1. SHELL THICKNESS VERIFICATION ACC. TO ASME VIII

At the top of the results window (*Figure 15*) there are the calculation outputs for the minimum shell thickness required for the actual design conditions. These calculations are performed in accordance with the following **UG** requirements from ASME BPVC, Section VIII, Div. 1**:**

- UG-16(b): specifies the minimum thickness requirements for shells and heads of pressure vessels. According to UG-16(b), minimum thickness of shells or heads cannot be less than 1/4 inch (6 mm).
- UG-27(c): provides formulas for calculating the required thickness of cylindrical shells under internal pressure. The formulas are valid under the following conditions:
  - The thickness does not exceed one-half of the inside radius.
  - The internal pressure does not exceed 0.385 times the allowable stress "S" multiplied by the efficiency of the joint "E" (0.385SE).

COPY COMPLIANT to the original document resident on the computer system at the time of printing

Calculations performed according to UG-27(c) formula are evaluated for both ASME BPVC Division 1 and API 610 allowable stress criteria.

Inside the section titled 'SHELL VERIFICATION WITH INTERNAL PRESSURE', the tool indicates whether the current geometry meets the specified **UG** requirements and can be considered "VERIFIED" for the above referenced criteria.

4.3.2.2. HEAD THICKNESS VERIFICATION ACC. TO ASME VIII ("TANK COVER")

In the middle of the results window (*Figure 15*) the calculation outputs for the minimum head thickness required appear, based on the actual geometry type and design conditions. These calculations are performed in accordance with the following **UG** requirements from ASME BPVC, Section VIII, Div. 1**:**

- UG-32(c) deals with the design of formed heads, such as hemispherical, ellipsoidal, and torispherical heads. It provides formulas for calculating the minimum required thickness of these heads based on internal pressure and some geometry constraints. The formulas consider factors like the material's allowable stress, the internal design pressure, and the head's geometry.
- Appendix 1-4 provides specific requirements for the design of vessel heads. Specifically:
  - Appendix 1-4(c): This section deals with *ellipsoidal heads*. It provides a formula for calculating the minimum required thickness of ellipsoidal heads. The formula considers the internal pressure, the allowable stress of the material, and the joint efficiency. Compared to UG-32(c) formulas for this type of heads, it offers further calculations for ellipsoidal heads with a *head proportion ratio* (*D/2h* ratio) different from the standard 2:1 (*D/2h*=2).
  - Appendix 1-4(d): This section deals with *torispherical heads*. It outlines the requirements for torispherical heads, including the calculation of the minimum required thickness. The formula used is similar to the one used for ellipsoidal heads but has been adapted to account for the geometry of torispherical heads. Compared to UG-32(c) formulas for this type of heads, it offers alternative design rules for torispherical heads, accommodating a wider range of dimensions and more loading conditions.

Inside the section titled "HEAD VERIFICATION", the tool specifies if the actual geometry can be considered "VERIFIED" according to the above specified **UG** requirements.

COPY COMPLIANT to the original document resident on the computer system at the time of printing

4.3.2.3. SHELL VERIFICATION WITH EXTERNAL PRESSURE

In the bottom of the results window (*Figure 15*) the calculation outputs for verifying the external pressure acting on the suction can appear, in accordance with the specified **UG** requirement from ASME BPVC, Section VIII, Div. 1**:**

- UG-28 provides guidelines for verifying the minimum thickness of shells and heads under external pressure, ensuring that the pressure casing can withstand the specified external pressure conditions without buckling.

In most cases, suction can is exposed to external pressure only when it is required to operate with internal pressure less than atmospheric pressure (i.e. suction pressure of the pump lower than 1013 *bara*).

Inside the section titled “SHELL THICKNESS VERIFICATION”, the tool indicates whether the current geometry meets the specified **UG** requirements and can be considered "VERIFIED". This evaluation is based on Factors "A" and "B" as specified in ASME BPVC, Section VIII, Division 1:

- Factor A: this coefficient accounts for the material properties and the geometry of the vessel. It is used in design formulas to determine the minimum required thickness to resist external pressure, ensuring the vessel can withstand the specified external pressure without buckling.
- Factor B: this coefficient adjusts the required thickness based on the type of joint and its efficiency. It modifies the design calculations to account for the quality of the welds or joints, ensuring that the vessel's joints are strong enough to handle the external pressure safely.

If the calculated “max. allowable external working pressure” is bigger than the expected external pressure, then the calculation is verified.

Important: if the verification for external pressure is neither applicable nor required, this section can be omitted when evaluating the calculation results.

4.3.3. “Flange Design” results

In this section the flange design for *suction can* is verified according to:

- ASME BPVC, Section VIII, Division 1, Appendix Y.
- ASME BPVC, Section VIII, Division 1, Appendix 2.
- **TMP** design rules.

As already explained in Chapter 3, in typical suction can applications, the custom flanges are generally used with self-energizing gaskets such as O-rings and with metal-to-metal contact outside the bolt circle. Therefore, verification under Appendix Y (upper-left part of *Figure:* 16) applies. For

COPY COMPLIANT to the original document resident on the computer system at the time of printing

other scenarios, please refer to the verification guidelines in Appendix 2 (refer to para. 4.3.3.2). Verification according to TMP design rules applies to further verify the gasket sealing.

Paragraphs 4.3.3.1, 4.3.3.2 e 4.3.3.3 describe into detail the verifications that were briefly explained above. The results of the verifications appear in the window as shown in *Figure:* 16.

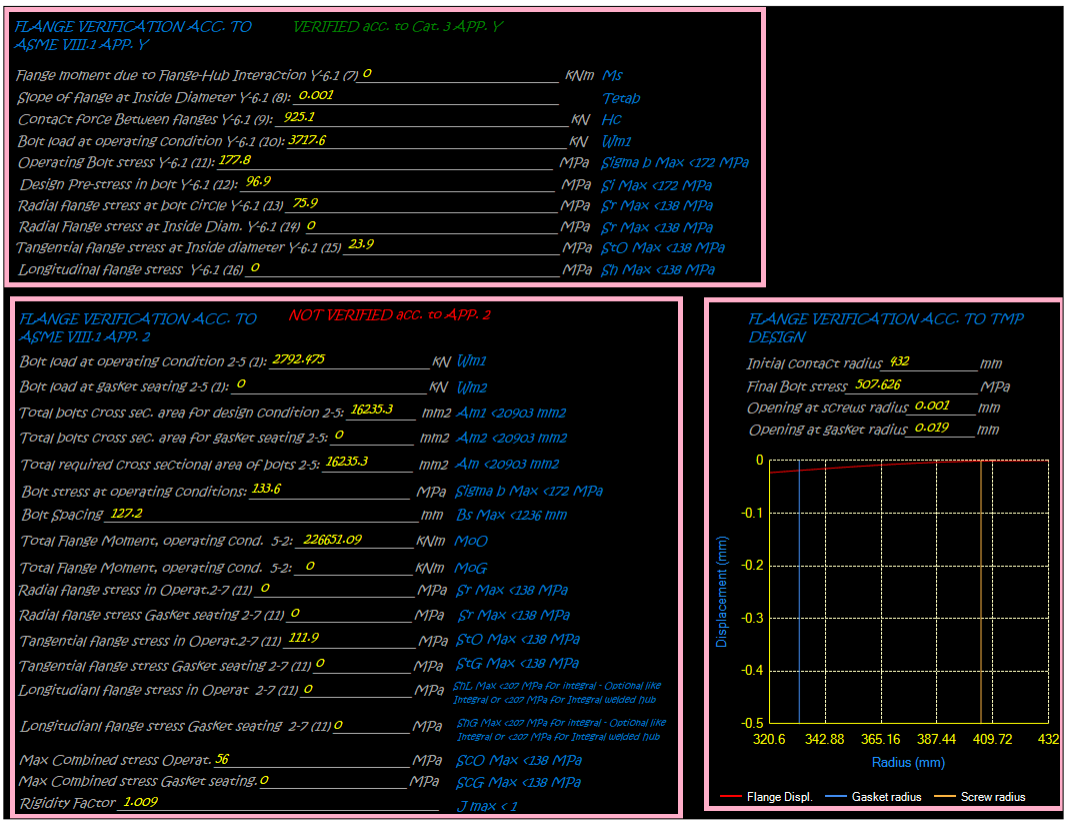

Figure: 16 "Flange Design" results (the three main sections are highlighted).

4.3.3.1. FLANGE VERIFICATION ACC. TO ASME VIII.1 APP.Y

Appendix Y in the ASME BPVC, Section VIII, Division 1 provides guidelines for the design of custom flanges. The key points about Appendix Y flanges include:

- *Flat-faced flanges*: The flanges must be flat-faced and parallel to the mating flange.
- *Metal-to-metal contact*: There must be metal-to-metal contact outside the bolt circle, which precludes the use of full-faced gaskets.
- *Self-energizing gaskets*: These flanges typically use self-energizing gaskets (i.e., O-rings) that do not require significant gasket seating forces.

Next to the title of this section, a status message will appear based on the calculated results for the actual geometry and design conditions. The tool indicates whether the current geometry meets the Appendix Y requirements with a green message, "VERIFIED acc. to Cat.3 APP. Y" (*loose* flanges

COPY COMPLIANT to the original document resident on the computer system at the time of printing

only) or "VERIFIED acc. to Cat.1 and Cat.2 APP. Y" (*integral* flanges only). If the requirements are not met, the red message "NOT VERIFIED" appears.

Note on *loose* vs. *integral* flanges: the verification process depends on the type of flange selected ("Flange Type" in *Figure 6*). Calculations in accordance with Appendix Y vary based on the flange category (Cat.1 through Cat.3) and the calculation tool accounts for this. Typically, loose flanges require more detailed calculations and design considerations to ensure they can handle the loads and maintain a seal, thus aligning with the complexity and more stringent requirements of Cat.3.

4.3.3.2. FLANGE VERIFICATION ACC. TO ASME VIII.1 APP.2

At the bottom-left of the results window (*Figure:* 16) the calculation outputs for the mechanical strength of the flange appear, as per Appendix 2 of ASME BPVC, Section VIII, Division 1 which provides detailed guidelines for the design of flanges. The key points about Appendix 2 flanges include:

- *Flange dimensions*: specifications for the thickness, diameter, and other dimensions of flanges.
- *Bolt loads*: calculations for the loads on bolts due to internal pressure and gasket seating.
- Gasket factors: guidelines for selecting and calculating gasket factors to ensure proper sealing.
- *Stress analysis*: methods for analyzing stresses in flanges to ensure they can withstand the operating conditions.

Appendix 2 is typically required for demanding and high-pressure applications involving ASME standard flanges, such as ASME B16.5 and ASME B16.47, as well as custom flanges with non-self-energizing gaskets like spiral wound gaskets and without metal-to-metal contact.

Next to the title of this section, a status message will appear based on the calculated results for the actual geometry and design conditions. The tool indicates whether the current geometry meets the Appendix 2 requirements with a green message, "VERIFIED acc. to APP. 2 for Integral-Optional and Integral welded hub". If the requirements are not met, a red message, "NOT VERIFIED acc. to APP. 2".

4.3.3.3. FLANGE VERIFICATION ACC. TO TMP DESIGN

In the bottom-right corner of the results window (Figure 16), the flange calculations based on the TMP design standard are displayed. This design standard is derived from Plate Theory and Roark's formulas. For a detailed example including all applicable formulas, please refer to **ANNEX A: TMP design internal rules for *suction can* design**. Roark's formulas and Plate Theory are used mainly to evaluate flange opening at gasket radius and the resulting bolt stress in the flanged connection.

COPY COMPLIANT to the original document resident on the computer system at the time of printing

The output of these calculations is useful to evaluate the above parameters for a preliminary verification only, since the design shall be validated through **FEM** analysis.

Important: special attention should be given to evaluate the flange opening at the gasket radius. If the verification aims to pre-assess the flange opening under **HT** conditions, that are the most severe for flange opening, then the **HT** pressure and test temperature should be set in the input data (refer to *Figure 10*) to verify the results, as outlined in Chapter 4.2.1.

4.3.4. "Mass calculation" results

This page is designed to help estimating the weight of a suction can during the bidding stage. The estimated mass includes the flange, shell, and head. The output is displayed in a concise summary window (refer to *Figure:* 17 for an example).

Important: please note that the tool assumes a standard steel material density of approximately 7860 kg/m³. If using special alloys that are significantly lighter or heavier (e.g., Inconel 625 with a density of 8440 kg/m³), it will be needed to manually adjust the output weight to reflect the actual material density.

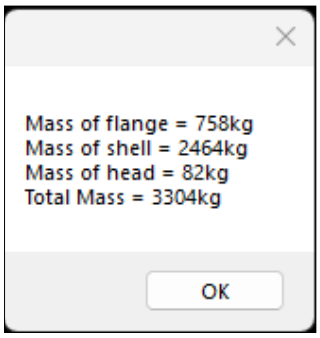

Figure: 17 "Mass calculation" results (example).

4.3.5. "PED verification (WIP)" results

On this page, the PED category is calculated based on the requirements of the old Directive 97/23/EC (the current PED is 2014/68/EU). The calculation performed by this tool is not verified and should not be used for official calculations. For informational purposes only, *Figure:* 18 shows the calculation output.

COPY COMPLIANT to the original document resident on the computer system at the time of printing

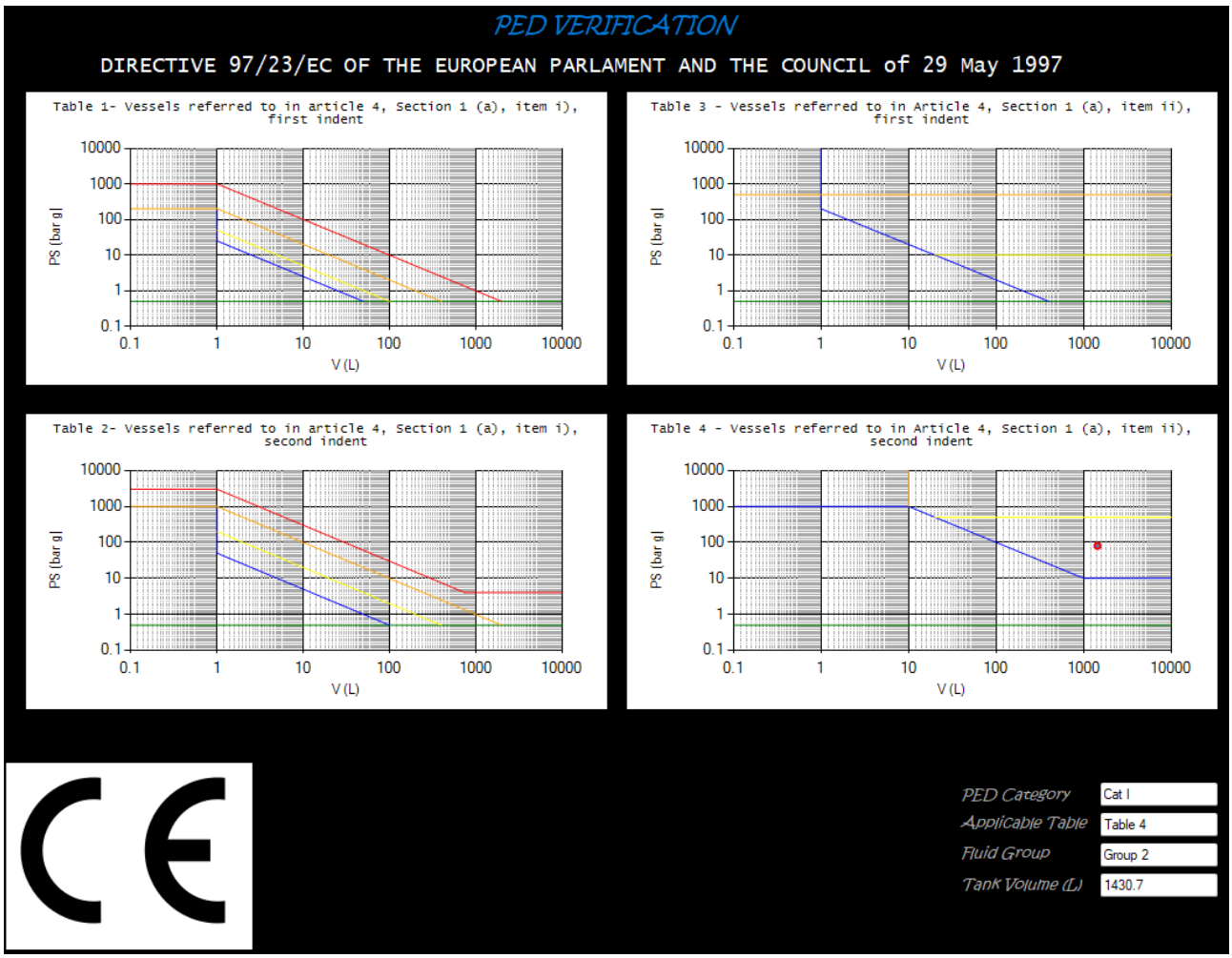

Figure: 18 "PED verification" results.

5. References

- ASME BPVC Section VIII, Division 1: 2023
- ASME BPVC Section II: 2023
- API 610 12th edition
- ANSI/HI 9.8:2018
- **SOP-506 –** "Structural analysis – Level 3 – Forced response analysis – VS pump"
- **Mod.482 –** "O-ring"

COPY COMPLIANT to the original document resident on the computer system at the time of printing

ANNEX A: TMP design internal rules for *suction can* design

The example at the end of this annex shows all the applied *"TMP design"* formulas written in Mathcad language.

The physics problem has been solved using the following hypothesis and procedure:

- The flange of the can has been assumed to be a circular plate, with external diameter completely constrained.

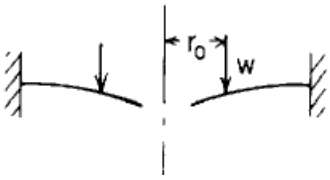

- External diameter of the flange is the one where the metal-to-metal contact begins (where the contact surfaces begin to open), it is not the geometric one.
- External forces applied to the plate are:
  1. The bolt load: it is the bolt preload plus the overload on the bolt caused by plate deformation. Bolt is considered as a rod, the rigidity of the flange beneath the bolt is calculated according to Johan Olsson's theory and the overload is calculated accordingly.
  2. Load from the shell of the can: it is the result of internal pressure.
  3. Load between the gasket and the internal diameter: it is the result of the internal pressure acting on the flange inside the gasket diameter, applied in the mean diameter between the internal and the gasket diameter.
- Each load case can be analyzed separately using Plate Theory and Roark's Formula[1]. The bolt depends on the deformation of the flange, so this load case has been solved as a hyperstatic structure.
- The superposition principle is applied: it is possible because the external constraint is the diameter of the flange inside which there is no contact, resulting in a linear equation system.

---

[1] **Plate Theory**: Plate Theory is a branch of structural mechanics that deals with the behavior of flat plates subjected to various loading conditions. It provides mathematical formulations to predict deflection, stress distribution, and stability of plates. This theory is essential for understanding how plates, such as those in flanged connections, respond to forces and moments.

Roark's Formulas: "*Roark's Formulas for Stress and Strain"* is a comprehensive bibliographic reference that offers a wide range of equations for calculating stress and strain in different structural elements. These formulas cover various scenarios, including flat plates, beams, and shells, providing engineers with methods to assess structural integrity. Roark's formulas are widely used for stress analysis in engineering applications.

COPY COMPLIANT to the original document resident on the computer system at the time of printing

- The contact diameter is unknown because it results from the deformations in each load case. That unknown variable is solved by imposing in that point an external moment equal to zero (instead of equal to the moment due to the stiffness of the flange outside the diameter of contact). This condition is not theoretically right but it is quite conservative and prudently leads to a larger flange calculated deformation.

IMPORTANT:

The results of the calculation are:

- The final bolt load (must be lower than 90% of yield stress).
- Opening at gasket radius (to be used to verify the gasket seating).

COPY COMPLIANT to the original document resident on the computer system at the time of printing

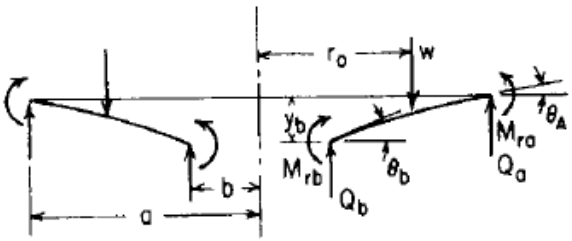

1e. Outer edge fixed, inner edge free

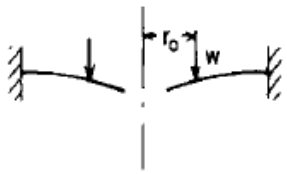

$\boxed{Press \equiv 20bar}$ **internal pressure**

MATERIALS

$Ef := 200000MPa$ $Eb := 200000MPa$ Young modulus: flange and bolt

$Sybolt := 900MPa$ Bolt Yield stress

$v := 0.3$ Poisson

PLATE GEOMETRY

$amax := 680mm$ External diameter of flange

$b := 479mm$ tank internal radius

$t := 80mm$ tank flange thickness

$rg1 := 580mm$ gasket radius

$rsc := 621mm$ bolt circle radius

BOLT GEOMETRY

$nb := 36$ number of bolts

$\boxed{\xi \equiv 75\%}$ Bolt preload percentage

$d := 33mm$ Bolt resistance diameter

$Ab := \pi \cdot \left(\frac{d}{2}\right)^2$ Bolt resistance Area

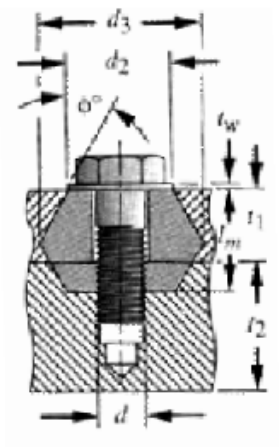

$Lbolt := 180mm$ Bolt length (part of bolt which is in tension, not inside the flange)

$tw := 0mm$ Spacer thickness

$d_cont := 50mm$ *Diameter of contact area between tra screw and joint*

$t2 := 73.5mm$ Casing thread length in foundation ring

$t1 := 155mm$ *thickness of flange+delivery bend*

$\phi := \frac{\pi}{6}$ Contact cone

$$lm := \begin{cases} t1 + \frac{t2}{2} & \text{if } t2 < d \\ t1 + \frac{d}{2} & \text{otherwise} \end{cases} = 171.5 \cdot mm$$

$\boxed{d3 := d_cont + lm \cdot \tan(\phi) = 149.016 \cdot mm}$ Cone width

$$Acono := \frac{\pi}{4} \cdot \left[\left(\frac{d_cont + d3}{2}\right)^2 - d^2\right] = 6.922 \times 10^3 \cdot mm^2$$ *Cone Frusta Method Area*

$$\boxed{kc := \frac{Acono \cdot Ef}{lm} = 8.072 \times 10^9 \frac{N}{m}}$$ *Flange stiffness "Johan Olsson"*

COPY COMPLIANT to the original document resident on the computer system at the time of printing

$$kb := \frac{Ab \cdot Eb}{}$$ *Bolt stiffness*

Roark's coefficients

$$D := \frac{Ef \cdot t^3}{12 \cdot \left(1 - v^2\right)} = 9.377 \times 10^6 \, J$$

$$C1(a) := \frac{1+v}{2} \cdot \frac{b}{a} \cdot \ln\left(\frac{a}{b}\right) + \frac{1-v}{4} \cdot \left(\frac{a}{b} - \frac{b}{a}\right)$$

$$C4(a) := 0.5 \cdot \left[(1+v) \cdot \frac{b}{a} + (1-v) \cdot \frac{a}{b}\right]$$

$$C7(a) := 0.5 \cdot \left(1 - v^2\right) \cdot \left(\frac{a}{b} - \frac{b}{a}\right)$$

$$L6(ro, a) := \frac{ro}{4 \cdot a} \cdot \left[\left(\frac{ro}{a}\right)^2 - 1 + 2 \cdot \ln\left(\frac{a}{ro}\right)\right]$$

$$L3(ro, a) := \frac{ro}{4 \cdot a} \cdot \left[\left[\left(\frac{ro}{a}\right)^2 + 1\right] \cdot \ln\left(\frac{a}{ro}\right) + \left(\frac{ro}{a}\right)^2 - 1\right]$$

$$L9(ro, a) := \frac{ro}{4 \cdot a} \cdot \left[\frac{1+v}{2} \cdot \ln\left(\frac{a}{ro}\right) + \frac{1-v}{4} \cdot \left[1 - \left(\frac{ro}{a}\right)^2\right]\right]$$

$$L13(ro, a) := \frac{a^2}{14400 \cdot (a - ro)^2} \cdot \left[25 - 128 \cdot \left(\frac{ro}{a}\right) + 225 \cdot \left[\left(\frac{ro}{a}\right)^2\right] - 25 \cdot \left[\left(\frac{ro}{a}\right)^4\right] - 97 \cdot \left[\left(\frac{ro}{a}\right)^6\right] - 60 \cdot \left[\left(\frac{ro}{a}\right)^4\right] \cdot \left[5 + \left[\left(\frac{ro}{a}\right)^2\right]\right] \cdot \ln\left(\frac{a}{ro}\right)\right]$$

$$L16(ro, a) := \frac{a^2}{1440 \cdot (a - ro)^2} \cdot \left[15 - 64 \cdot \left(\frac{ro}{a}\right) + 90 \cdot \left[\left(\frac{ro}{a}\right)^2\right] - 6 \cdot \left[\left(\frac{ro}{a}\right)^6\right] - 5 \cdot \left[\left(\frac{ro}{a}\right)^4\right] \cdot \left(7 + 12 \cdot \ln\left(\frac{a}{ro}\right)\right)\right]$$

$$L19(ro, a) := \frac{a^2}{1440 \cdot (a - ro)^2} \cdot \left[15 \cdot (5 + v) - 64 \cdot \frac{ro}{a} \cdot (4 + v) + 90 \cdot \left(\frac{ro}{a}\right)^2 \cdot (3 + v) - 5 \cdot \left[\left(\frac{ro}{a}\right)^4\right] \cdot (19 + 7 \cdot v) + 6 \cdot \left(\frac{ro}{a}\right)^6 \cdot (1 - v) - 60 \cdot \left[\left(\frac{ro}{a}\right)^4\right] \cdot (1 + v) \cdot \ln\left(\frac{a}{ro}\right)\right]$$

$$G3(r, ro) := \frac{ro}{4 \cdot r} \cdot \left[\left[\left(\frac{ro}{r}\right)^2 + 1\right] \cdot \ln\left(\frac{r}{ro}\right) + \left(\frac{ro}{r}\right)^2 - 1\right]$$

$$G12(r, ro) := \frac{r}{14400 \cdot (r - ro)} \cdot \left[64 - 225 \cdot \frac{ro}{r} - 100 \cdot \left(\frac{ro}{r}\right)^3 + 261 \cdot \left(\frac{ro}{r}\right)^5 + 60 \cdot \left(\frac{ro}{r}\right)^3 \cdot \left[3 \cdot \left(\frac{ro}{r}\right)^2 + 10\right] \cdot \ln\left(\frac{r}{ro}\right)\right]$$

$$G13(r, ro) := \frac{\left(r^2\right)}{14400 \cdot (r - ro)^2} \cdot \left[25 - 128 \cdot \frac{ro}{r} + 225 \cdot \left(\frac{ro}{r}\right)^2 - 25 \cdot \left(\frac{ro}{r}\right)^4 - 97 \cdot \left(\frac{ro}{r}\right)^6 - 60 \cdot \left(\frac{ro}{r}\right)^4 \cdot \left[5 + \left(\frac{ro}{r}\right)^2\right] \cdot \ln\left(\frac{r}{ro}\right)\right]$$

$$G6(r, ro) := \frac{ro}{4 \cdot r} \cdot \left[\left(\frac{ro}{r}\right)^2 - 1 + 2 \cdot \ln\left(\frac{r}{ro}\right)\right]$$

$$F1(r) := \frac{1+v}{2} \cdot \frac{b}{r} \cdot \ln\left(\frac{r}{b}\right) + \frac{1-v}{4} \cdot \left(\frac{r}{b} - \frac{b}{r}\right)$$

$$F4(r) := 0.5 \cdot \left[(1+v) \cdot \frac{b}{r} + (1-v) \cdot \frac{r}{b}\right]$$

COPY COMPLIANT to the original document resident on the computer system at the time of printing

ROARKS generic formulas for circular plate

$$yb(ro,w,a) := \frac{-w\cdot a^3}{D}\cdot\left(\frac{C1(a)\cdot L6(ro,a)}{C4(a)} - L3(ro,a)\right)$$

Displacement at point with r=b (negative is downwards) - load w dependant

$$\theta b(w,ro,a) := \frac{w\cdot a^2}{D\cdot C4(a)}\cdot L6(ro,a)$$

Rotation at point with r=b

$$y(r,ro,w,a) := \begin{cases} yb(ro,w,a) + \theta b(w,ro,a)\cdot r\cdot F1(r) & \text{if } r \le ro \\ yb(ro,w,a) + \theta b(w,ro,a)\cdot r\cdot F1(r) - \frac{w\cdot r^3\cdot G3(r,ro)}{D} & \text{otherwise} \end{cases}$$

Displacement at generic point at r (negative is downwards) - load w dependant

$$\theta(r,ro,w,a) := \begin{cases} \theta b(w,ro,a)\cdot F4(r) & \text{if } r \le ro \\ \theta b(w,ro,a)\cdot F4(r) - \frac{w\cdot r^2\cdot G6(r,ro)}{D} & \text{otherwise} \end{cases}$$

Rotation at generic point at r (negative is downwards) - load w dependant

$$Mrb(w,ro,a) := -w\cdot a\cdot\left(L9(ro,a) - \frac{C7(a)\cdot L6(ro,a)}{C4(a)}\right)$$

Reaction bending Moment at r=b

PRESSURE CASE 1 - PRESSURE FROM TANK

$$Fp1 := Press\cdot\pi\cdot b^2$$

load due to internal pressure of tank

$$w1 := \frac{Fp1}{\pi\cdot 2\cdot b} = 4.79\times 10^5\cdot\frac{N}{m}$$

load per unit length at r=rp1

$$\boxed{yp1(r,a) := y(r,b,w1,a)}$$

Displacement at generic "r"

$$\boxed{\theta press1(r,a) := \theta(r,b,w1,a)}$$

Rotation at generic "r"

$$\boxed{Mp1(a) := Mrb(w1,b,a)}$$

Reaction bending Moment at r=b

$$\boxed{ybpress1(a) := yb(b,w1,a)}$$

Displacement at r=b

$$\boxed{\theta bpress1(a) := \theta b(w1,b,a)}$$

Rotation at r=b

$$\boxed{yP1rsc(a) := yp1(rsc,a)}$$

Displacement at r=rsc

PRESSURE CASE 2 - PRESSURE ON PLATE BEFORE GASKET

$$Fp2 := Press\cdot\pi\cdot\left[(rg1)^2 - (b)^2\right] = 6.72\times 10^5 N$$

Load due to pressure between internal radius and gasket

$$rp2 := [(rg1) - (b)]\cdot 0.5 + b = 529.5\cdot mm$$

Load position

$$w2 := \frac{Fp2}{\pi\cdot 2\cdot rp2} = 2.02\times 10^5\cdot\frac{N}{m}$$

Load per unit of length at r=rp2

$$yp2(r,a) := y(r,rp2,w2,a)$$

Displacement at generic "r"

$$\theta press2(r,a) := \theta(r,rp2,w2,a)$$

Rotation at generic "r"

$$Mp2(a) := Mrb(w2,rp2,a)$$

Reaction bending Moment at r=b

COPY OF THE original document resident on the computer system at the time of printing

BOLT CASE 1: preload

$wPRE := \frac{Fprec \cdot nb}{\pi \cdot 2 \cdot rsc} = 5.327 \times 10^{6} \cdot \frac{N}{m}$ — *Initial bolt Preload per unit of length at r=rsc*

$ybPre(r, a) := y(r, rsc, wPRE, a)$ — Displacement at generic "r"

$\theta pressPre(r, a) := \theta(r, rsc, wPRE, a)$ — Rotation at generic "r"

$MbPre(a) := Mrb(wPRE, rsc, a)$ — *Reaction bending Moment at r=b*

$yBrscPre(a) := ybPre(rsc, a)$ — Displacement at r=rsc

BOLT CASE 2: reaction to unit load

$w4 := 1 \frac{N}{m}$ — Unit load

$yp4(r, a) := y(r, rsc, w4, a)$ — Displacement at generic "r"

$Mp4(a) := Mrb(w4, b, a)$ — *Reaction bending Moment at r=b*

$yP4rsc(a) := yp4(rsc, a)$ — Displacement at r=rsc

$$\delta 11(a) := \frac{1 \frac{N}{m}}{\frac{kb \cdot nb}{2 \cdot \pi \cdot rsc}} + |yP4rsc(a)|$$

Displacement due to unit load

$$X1(a) := \frac{|yP1rsc(a)| + |yP2rsc(a)| - |yBrscPre(a)|}{\delta 11(a)}$$

Unit load Multiplier

$$FboltTOT(a) := Fprec + \frac{X1(a)}{nb} \cdot \frac{N}{m} \cdot (2 \cdot \pi \cdot rsc)$$

Total BOLT LOAD

$$\sigma BoltTOT(a) := \frac{FboltTOT(a)}{Ab}$$

Bolt stress

$\delta FinalBOLT(a) := \delta 11(a) \cdot X1(a)$ — Total Displacement at r=rsc

Initial contact radius determination

$a1 := amax = 0.68\,m$ — *variable initialization for iterative calculation*

Given

$$Mrb\left(\frac{FboltTOT(a1) \cdot nb}{2 \cdot \pi \cdot rsc}, rsc, a1\right) - (Mp2(a1) + Mp1(a1)) = 0$$

Bending moment at r=a is put equal to 0

$ax := Find(a1) = 634.015\,mm$ — Initial contact radius: value of "a" with which bending moment is 0

$\sigma BoltTOT(ax) = 675.275 \cdot MPa$ — *Total bolt stress*

$\delta FinalBOLT(ax) = 2.478 \times 10^{-4} \cdot mm$ — displacement at r=rsc (bolt position)

COPY COMPLIANT to the original document resident on the computer system at the time of printing

$\delta GASKET := \delta 1(rg1, ax) - \delta 2(rg1, ax) + \delta\left(rg1, rsc, \frac{FboltTOT(ax) \cdot nb}{\ldots}, ax\right)$ — displacement at r=rg1 (gasket position)

Flange displacement

$$\delta F(r) := (-yp1(r, ax) - yp2(r, ax)) + y\left(r, rsc, \frac{FboltTOT(ax) \cdot nb}{2 \cdot \pi \cdot rsc}, ax\right)$$

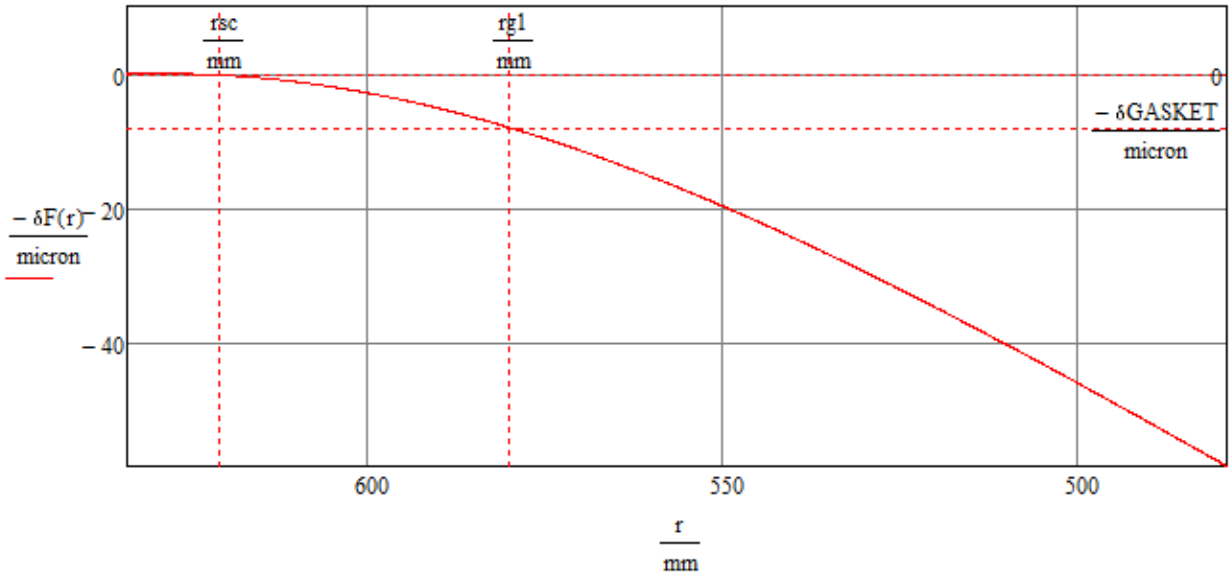

COPY COMPLIANT to the original document resident on the computer system at the time of printing